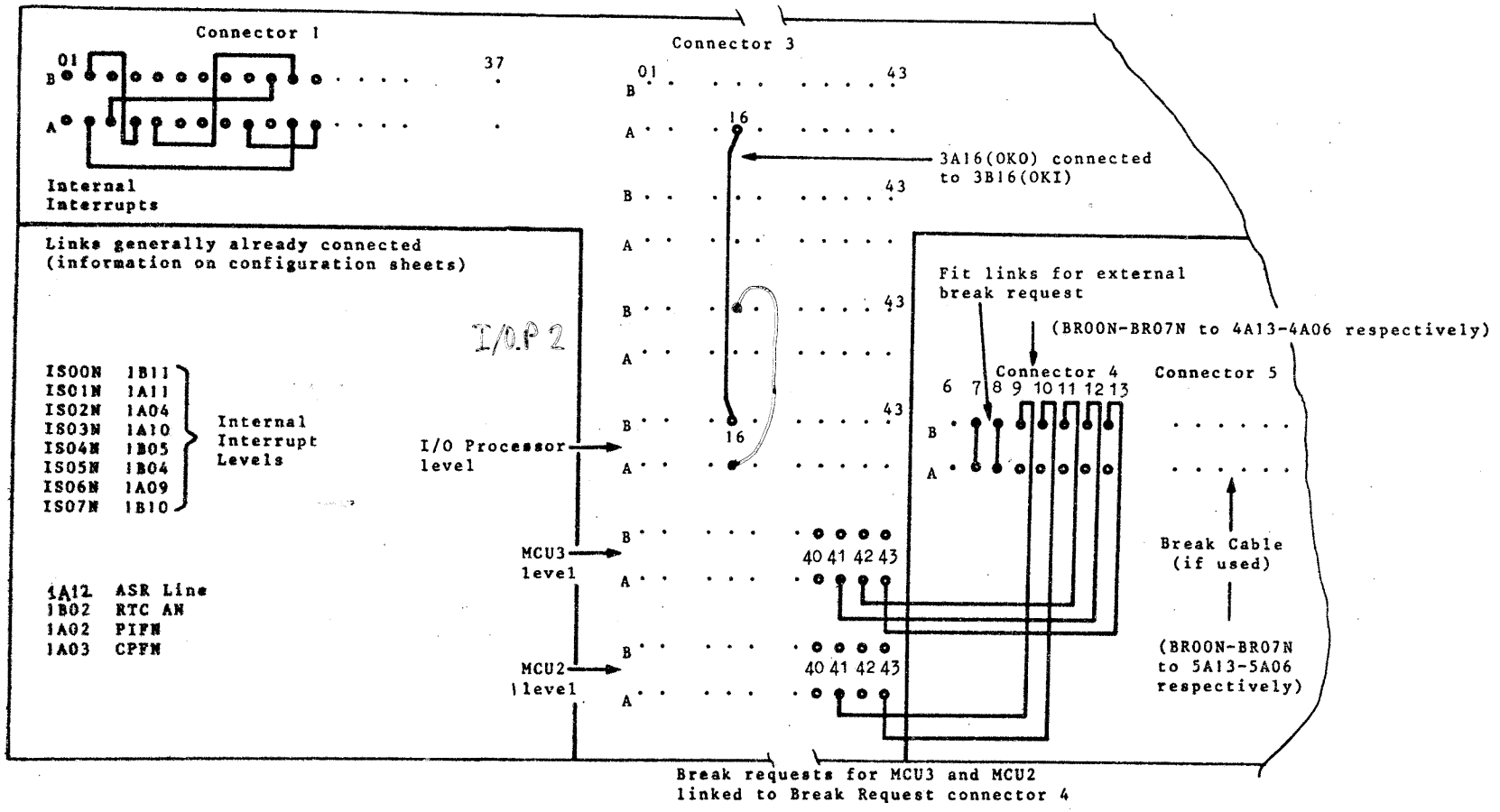

FIG. 2.6 BASIC MOUNTING BOX - LINKS

IS			
	00	1B11	
	01	1A11	
	02	1A4	
	03	1B10	A10
	04	1B5	
	05	1B4	
	06	1A5	A9
	07	1B~~10~~	

B

05	04		03	00
4	5	7	10	11

A

02	06		07	01

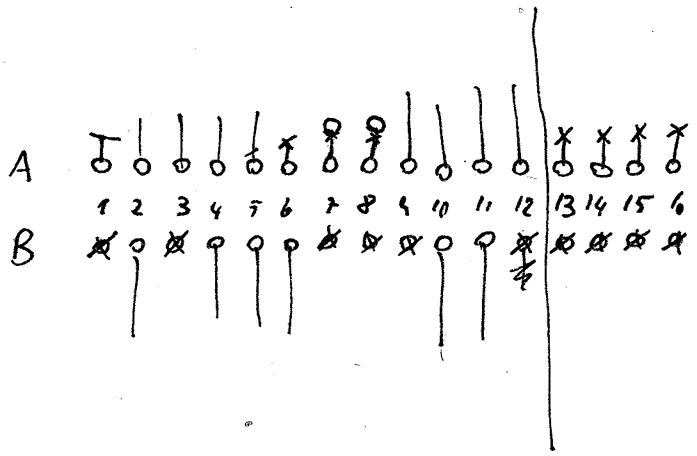

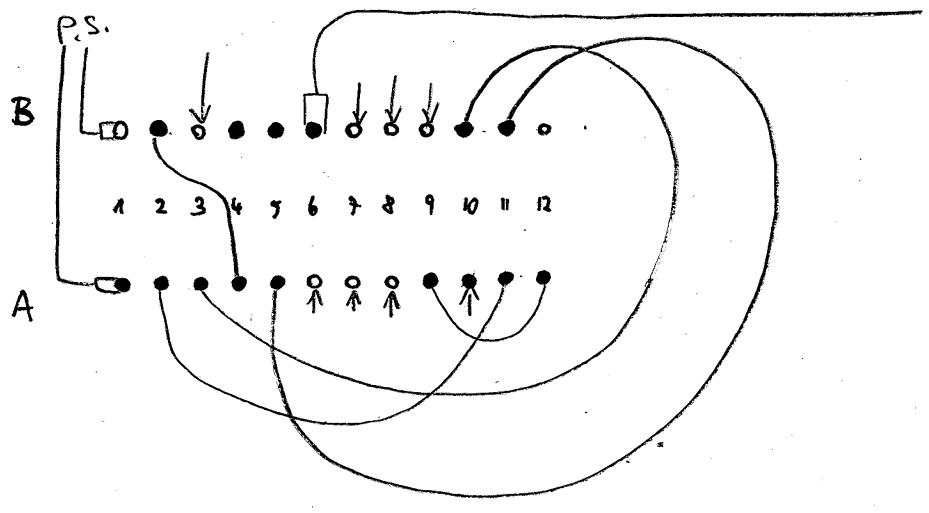

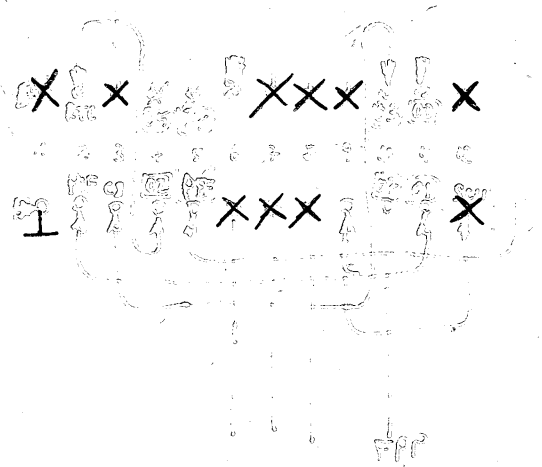

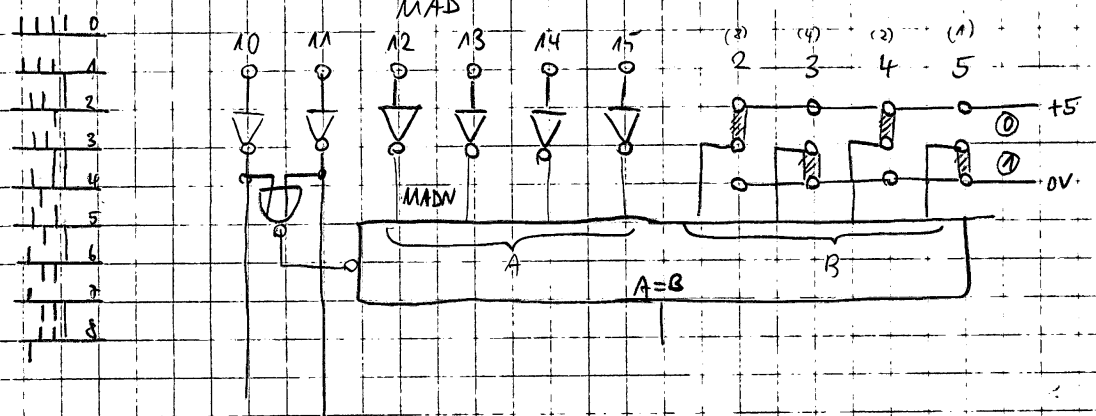

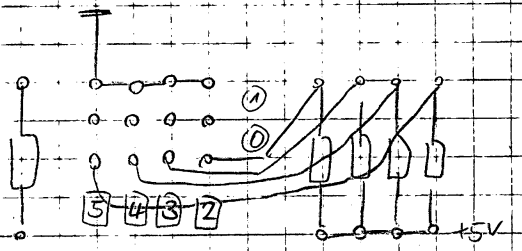

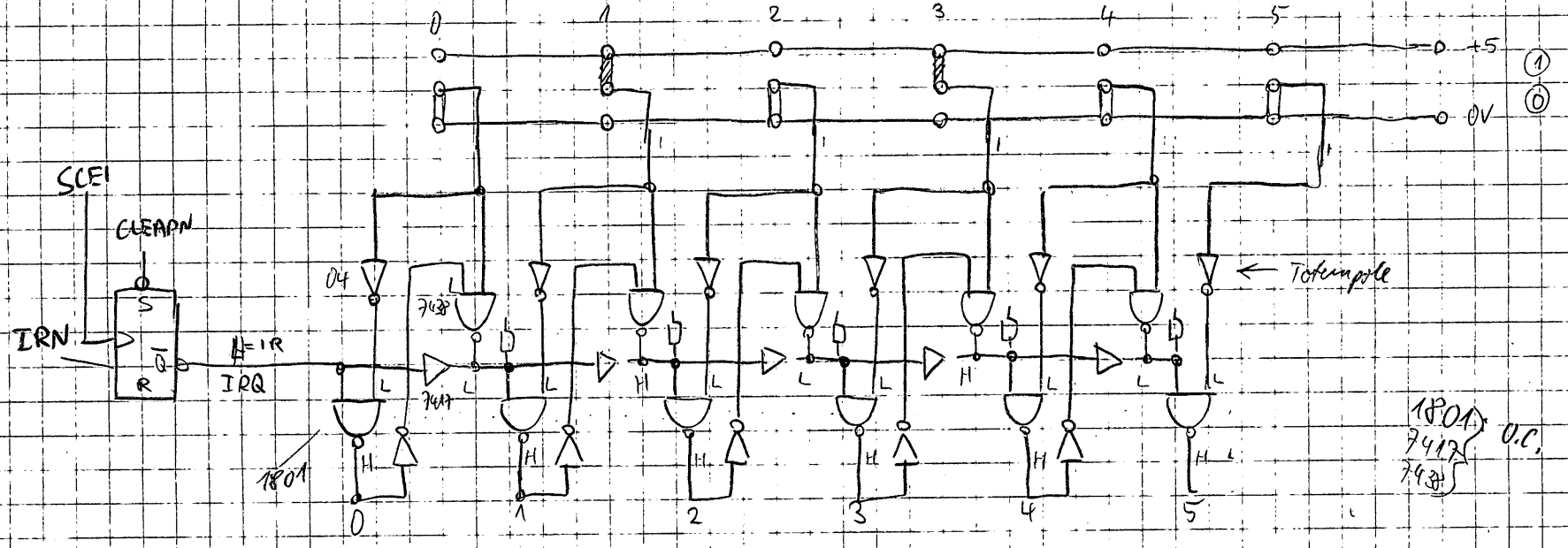

1801 O.C.
7417
7438

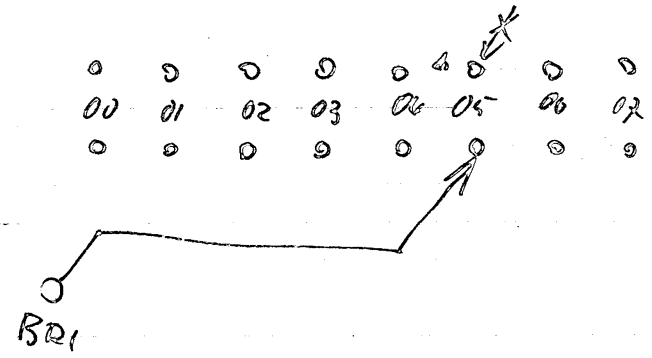
00 01 02 03 04 05 06 07
BQ1

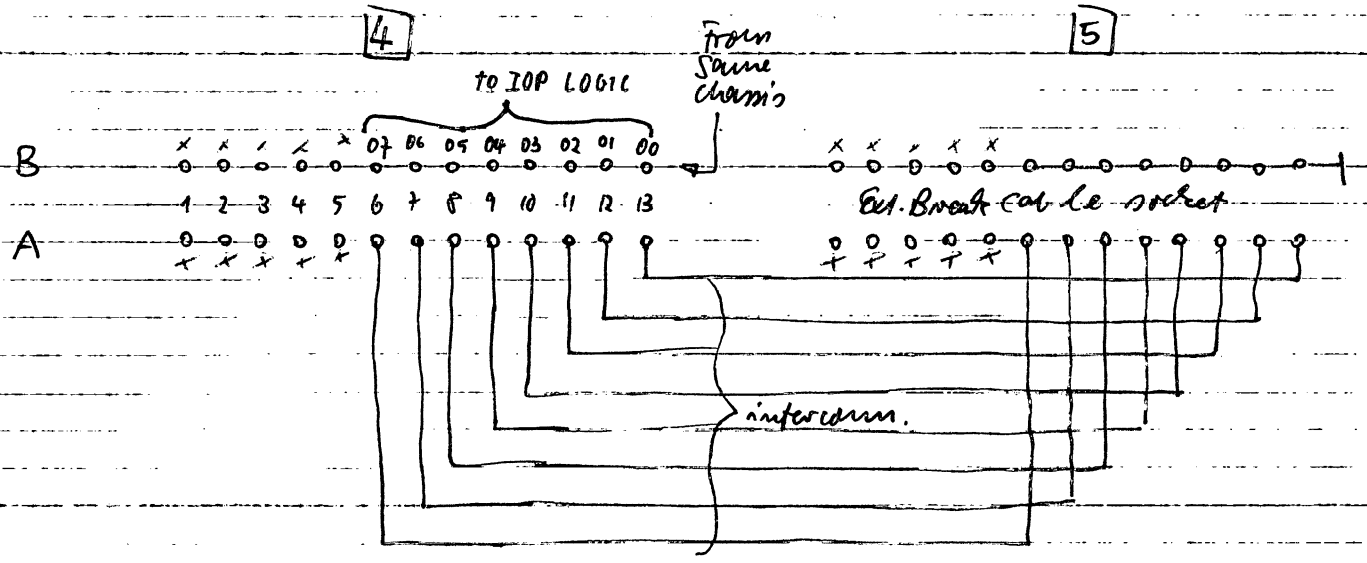
4
5
to IOP LOGIC
From same chassis
B
A
07 06 05 04 03 02 01 00
1 2 3 4 5 6 7 8 9 10 11 12 13
Ext. Break cable socket
interconn.

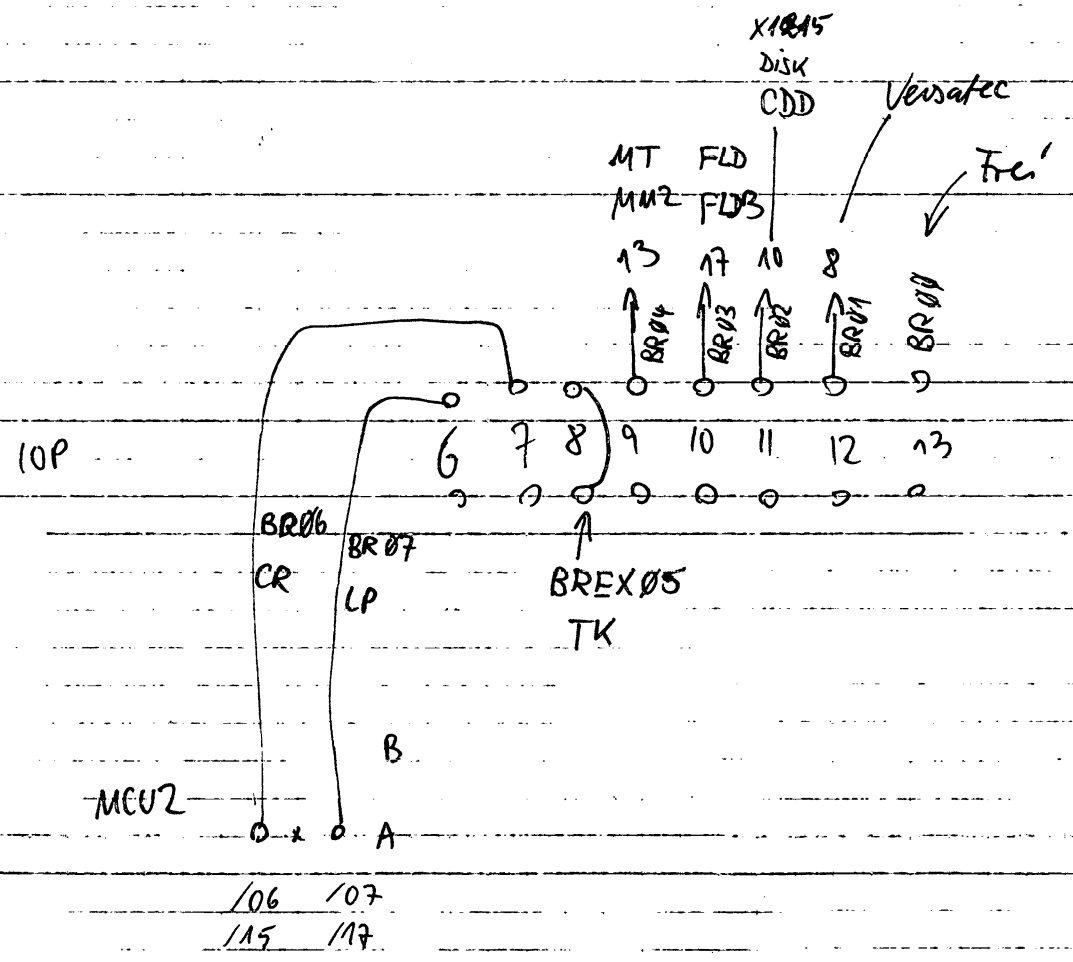
X1845
DISK
CDD
Versatec
MT FLD
MM2 FLD3
Frei
13 17 10 8
BR04 BR03 BR02 BR01 BR00
IOP
6 7 8 9 10 11 12 13
BR06
CR
BR07
LP
BREX05
TK
B
MCU2
A
/06 /07
/15 /17

P856/857
V-24

69421 (PER) female
69131 (CP817) male

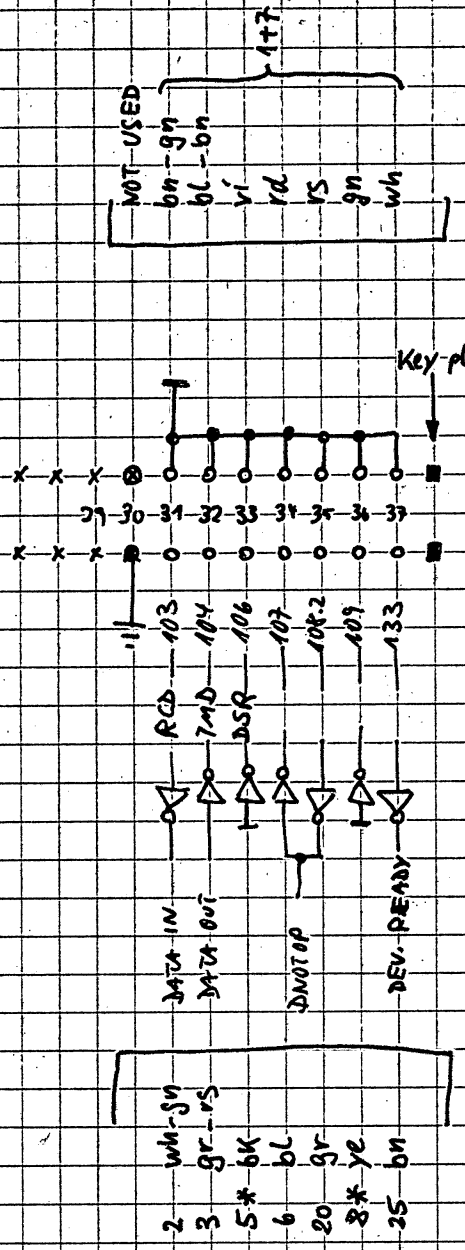

69421 (PER): female * not used in PER
69131 (P817): male

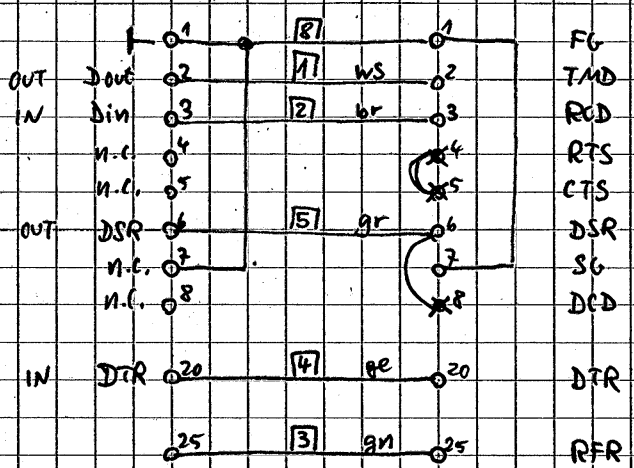
OUT
IN
OUT
IN
Dout
Din
n.c.
n.c.
DSR
n.c.
n.c.
DTR
1
2
3
4
5
6
7
8
20
25
8
1
ws
br
gr
ge
gn
FG
TMD
RCD
RTS
CTS
DSR
SG
DCD
DTR
RFR

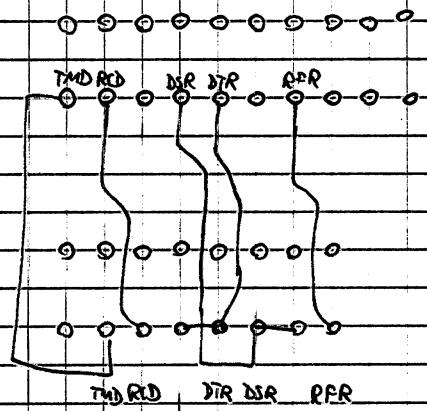
TMD RCD DSR DTR RFR
TMD RCD DTR DSR RFR

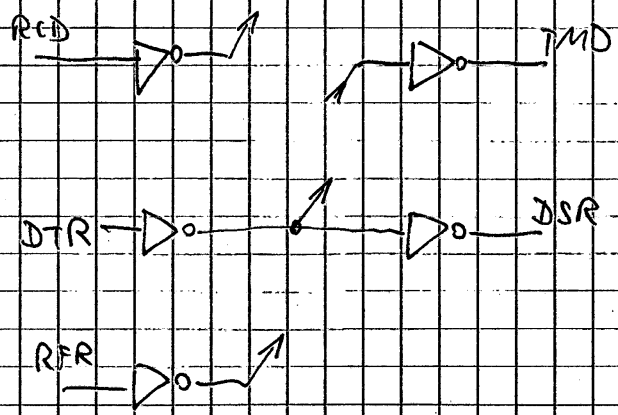
RTD
TMD
DTR
DSR
RFR

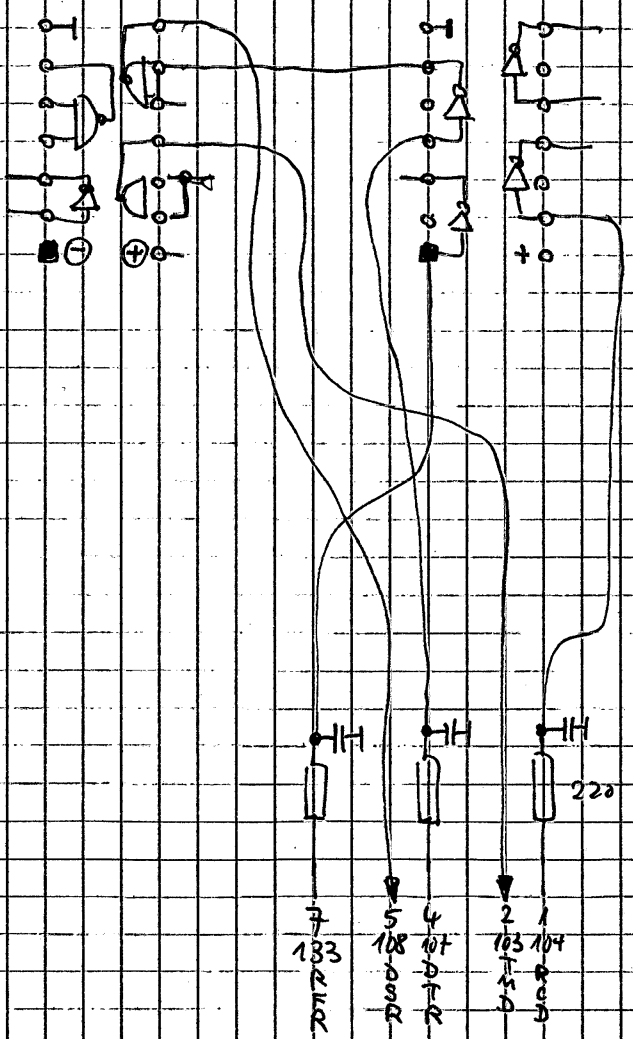
+
220
7
133
RFR
5
108
DSR
4
107
DTR
2
103
TXD
1
104
RXD

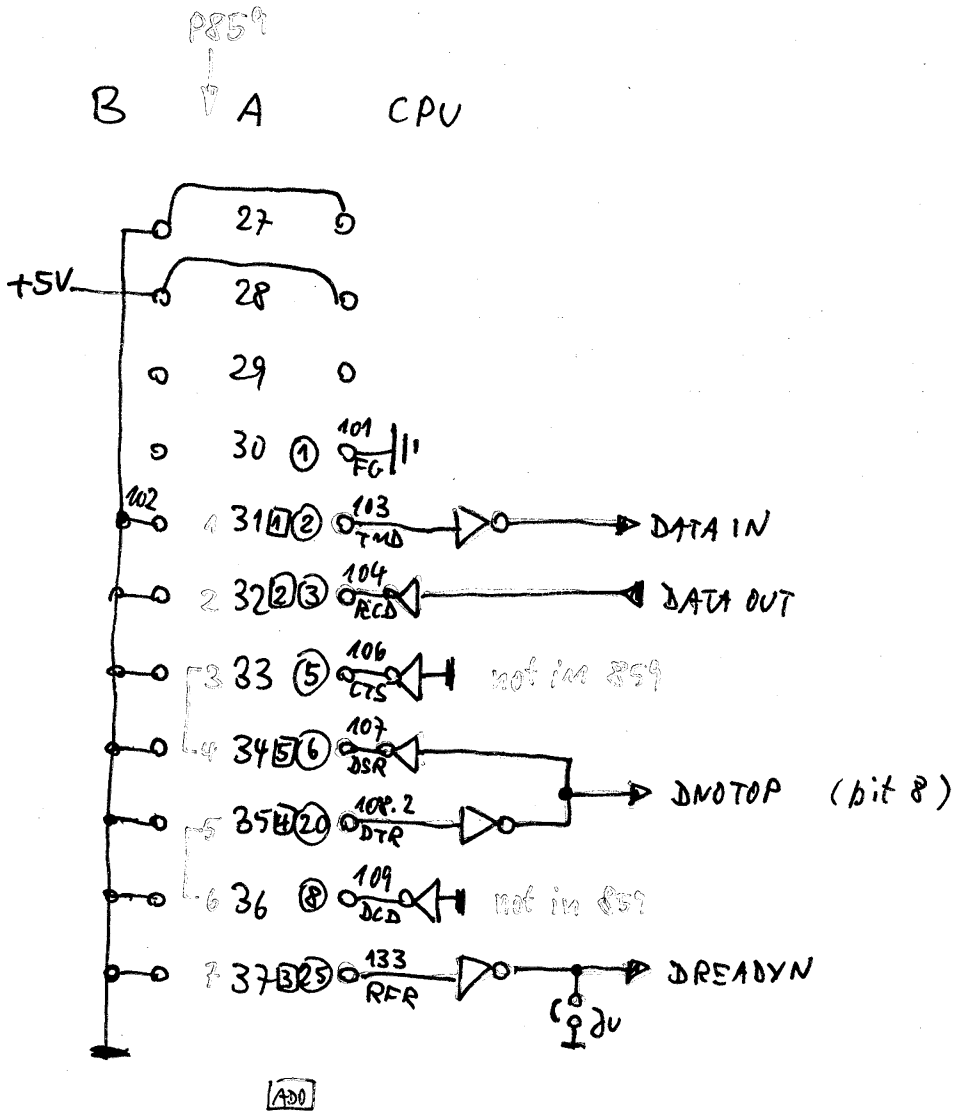

Driver: W1

Receiver: Y1

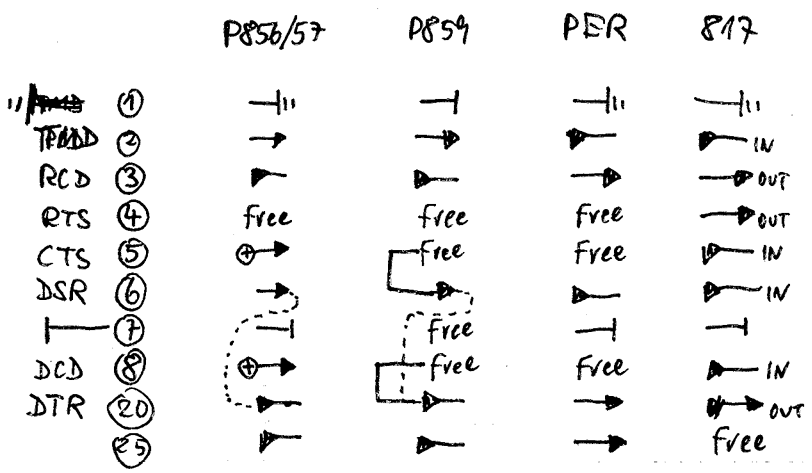

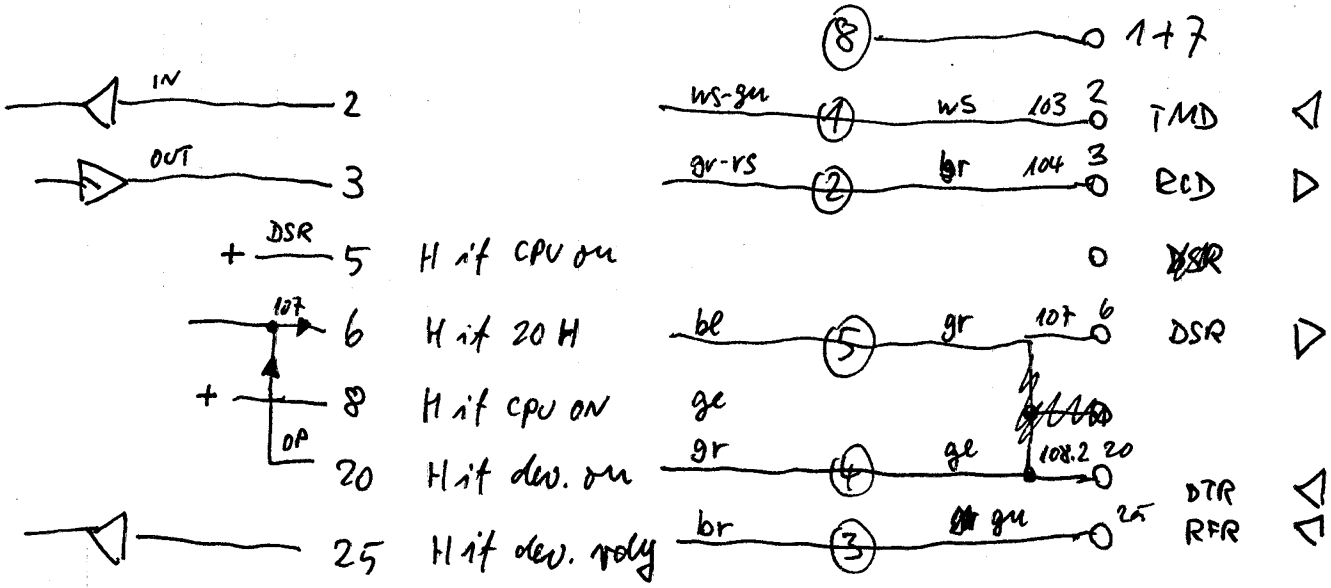
IN
2
OUT
3
+
DSR
5
H if CPU on
107
6
H if 20 H
+
8
H if CPU ON
DR
20
H if dev. on
25
H if dev. rdy
8
1+7
ws-gn
1
ws
103
2
TMD
gr-rs
2
br
104
3
ECD
0
bl
5
gr
107
6
DSR
ge
gr
4
ge
108.2
20
DTR
br
3
gn
25
RFR

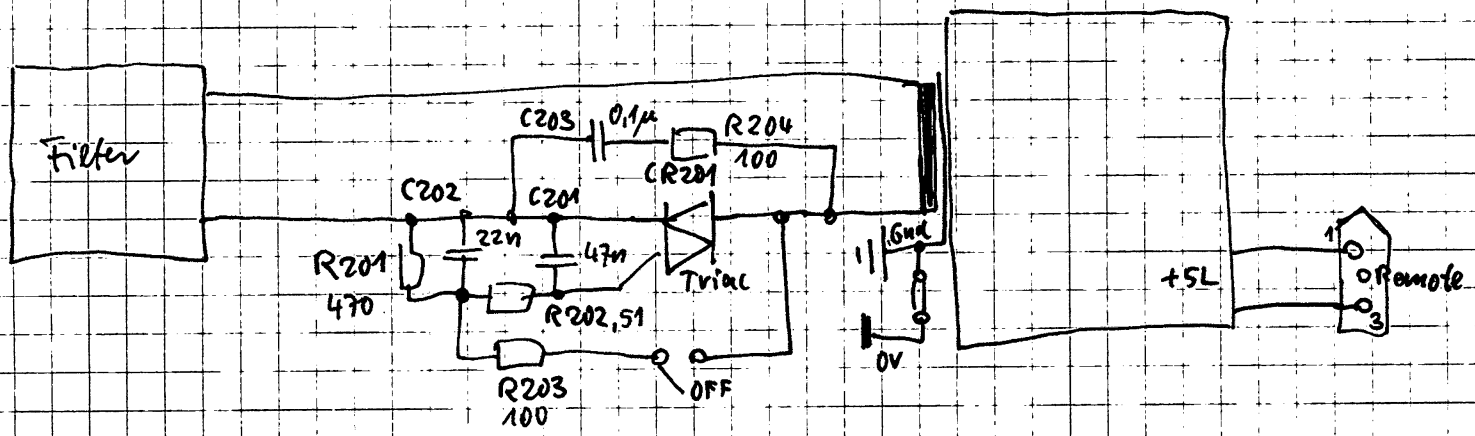

Triac
TXAL 608M

